CPE SYSTEMS INC

CB+114

TECHNICAL SPECIFICATIONS

CB+114

The CB+ is a re-designed C-series centrifugal pump with an internal mechanical seal. It maintains the reliability and durability of the C-series pump, while adding the advantages of an internal seal. This seal allows for the product to lubricate the seal fully during use and for the CIP process to completely sanitize the seal. This pump is designed for small to medium sized applications.

DESIGN

The internal seal allows for easy cleaning, prevents pooling on the seal, and permits greater seal pressure with less leaking. CPE CB+ pumps have the unique High-Clean cartridge seal; the seal is encased making it more sanitary and less prone to breakage. The CB+114 features the same collar and threaded impeller nut as the C+ pump. The collar clamps down evenly on all sides of the drive shaft, preventing the minor wobble that can occur from set screwed shafts. The threaded impeller nut fully secures the impeller in place, replacing the impeller pin of the c-series. Two specialized gaskets are used to seal the shaft and to allow a CIP procedure to clean behind the impeller. Together, the collar and bolted impeller reduce rattling at lower speeds. These design features make the CB+ uniquely capable for CIP and product transfer applications.

FEATURES

- 1 ½" X 1 ½" Tri-Clamp connections
- 316L stainless steel construction
- 304 stainless steel adapter
- Internal mechanical seal

High-Clean Seal

HORSEPOWER

Horsepower	Max. Flow Rate	Shut Off Head
1 HP	75 GPM	65 ft
1.5 HP	100 GPM	75 ft
2 HP	125 GPM	75 ft
3 HP	150 GPM	75 ft

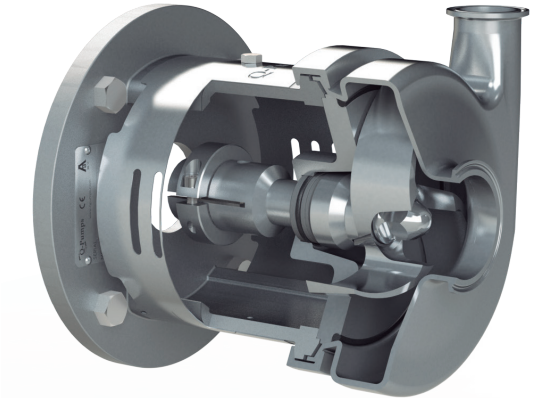

TECHNICAL SPECIFICATIONS

Materials	
Parts in Contact With Product:	316L Stainless Steel
Other Steel Parts:	304 Stainless Steel
Gaskets in Contact With Product:	EPDM (standard) Buna or Viton (special order)
Weight Without Motor:	12 lbs
Mechanical Seal	
Rotary Seal:	Carbon (standard) Silicon Carbide (special order)
Stationary Seal:	Silicon Carbide
External Surface Finish:	Bright Polish
Internal Surface Finish:	32 RA
Connection Type:	Tri-Clamp
Connection Size:	1.5" x 1.5"
Max. Impeller Diameter:	4"
Motor	
Type:	SS Washdown Motor TEFC Motor
Motor Frame Size:	NEMA 56C C-Face
Speeds:	1750 & 3450 RPM
Operating Limits	
Nominal Pressure:	8 bar (117 PSI)
Temperature Range:	14°F (-10°C) - 248°F (120°C)
Maximum Flow:	150 GPM (34 m^3/h)
Maximum Differential Head:	75 ft (23 m)
Maximum Speed:	3500 RPM (60 Hz)
Viscosity:	600 cP
Approvals	
Certification:	3A- Authorization #1537, 02-11 (centrifugal pumps) for CIP

LENZE Variable Frequency Drive

The Lenze i550 protec is our new inverter series in the ½ HP to 20 HP range. The series is available in 115, 230, 460, and 575 volt, 60 Hz, with 1 phase and 3 phase input. Voltage and phase options for each portable assembly depend on the model and motor horsepower. The slim and sleek casing is also extremely durable, featuring both impact resistance and IP66 washdown protection. A micro USB interface is provided for more efficient programming. This user-friendly VFD is programmable and has scalable functionality. This trustworthy and powerful VFD can be implemented into your operations with ease. The i550 can be controlled by the keypad, the included potentiometer, or a remote control (the remote control is available at additional cost). Our portable mixer and blender assemblies feature this VFD, allowing the speed to be adjusted to suit the product and process.

TECHNICAL SPECIFICATIONS

Horsepower:	1 to 3 HP
1Ø/3Ø Input:	1Ø 115/230 VAC, 50/60 Hz 3Ø 230/460/575 VAC, 50/60 Hz
3Ø Output:	208-230/460/575 VAC
Ambient Temperature:	-22°F - 131°F (-30°C - 55°C)
Standard IO:	5x digital input, 1x digital output, 2x analog input, 1x analog output, 1x relay output
Communication Networks:	CANopen, Modbus RTU, Modbus TCP, IO-Link, EtherCAT, EtherNet/IP, PROFINET
Approvals:	CE, UL, CSA, EAC, RoHS

FEATURES

- IP66 (NEMA 4X) approved; it is both dust and water resistant.
- Equipped with a Micro USB interface for programming and diagnostics.
- Full onboard PID programming for interfacing with flow meters, level controls, pressure sensors, and can/bottle fillers.
- The i550 Protec has a sensorless vector control for synchronous motors.
- Equipped with multiple digital and analog inputs for remote control and safety interlocks.
- Compatible with our wireless remote controls, pressure switches, and run dry protection.
- Equipped with a potentiometer (optional).

Knockdown Pump Cart

Custom designed for the craft food and beverage industry, this is our smallest pump cart, built for pumps up to 2 HP. This cart is arodynamic, tilt draining, maneuverable, and has a small footprint. The knockdown cart handle is removable, creating a compact cart that can be easily stored or wheeled into tight spaces. All parts are hand welded in Canada for quality assurance and durability.

Frame:	16 ga stainless steel square tube with foot
Handle:	16 ga stainless steel square tube
Platform:	14 ga stainless steel AISI 304 Pre-drilled to fit 56 and 143 NEMA frames
Axle:	1/2 ga stainless steel rod axle
Wheels:	2” x 5” non marking neoprene wheels

Medium Duty Cart

Custom designed for the craft food and beverage industry, this is our smallest pump cart, built for pumps 3 to 5 HP. This cart is aerodynamic, tilt draining, maneuverable, and has a small footprint. All parts are hand welded in Canada for quality assurance and durability.

Frame:	16 ga stainless steel round tube with foot
Handle:	16 ga stainless steel round tube
Platform:	11 ga stainless steel AISI 304 Pre-drilled to fit 184 and 213 NEMA frames
Axle:	1/2 “ stainless steel rod axle
Wheels:	8” Duraflex rubber wheels

Assemblies

The CB+114 is available as a pump and motor or as a portable pump assembly. The portable pump assembly includes a VFD, cart, cord, and plug. The portable assembly comes fully programmed and has more voltage options than the pump and motor.

PORTABLE ASSEMBLY COMPONENTS:

- CB+114 Pump Head
- TEFC or SS Washdown Motor
- LENZE VFD
- Stainless Steel Pump Cart
- Electrical Cord and Plug of Choice

PUMP AND MOTOR COMPONENTS:

- CB+114 Pump Head
- TEFC or SS Washdown Motor

Motors

STAINLESS STEEL WASHDOWN MOTOR:

- Totally Enclosed Fan Cooled (TEFC)
- Construction Material: Stainless Steel
- NEMA C-Face / 56C Frame
- NEMA Design B
- Factory Certified Class I, Division 2, Groups A, B, C, and D

TEFC MOTOR:

- Totally Enclosed Fan Cooled (TEFC)
- Construction Material: Painted Aluminum
- IP55 Enclosure Protection
- Class I, Division II, Groups A, B, C, and D Compliant

Portable Assembly Options

Horsepower	Available Motors	Cart	Available Voltages
1 HP	Stainless Steel Washdown Motor TEFC Motor	Knockdown Pump Cart	115 volt single phase 230 volt single phase 230 volt three phase 460 volt three phase 575 volt three phase
1 ½ HP	Stainless Steel Washdown Motor TEFC Motor	Knockdown Pump Cart	115 volt single phase 230 volt single phase 230 volt three phase 460 volt three phase 575 volt three phase
2 HP	Stainless Steel Washdown Motor TEFC Motor	Knockdown Pump Cart	115 volt single phase 230 volt single phase 230 volt three phase 460 volt three phase 575 volt three phase
3 HP	Stainless Steel Washdown Motor TEFC Motor	Medium Duty Cart	230 volt single phase 230 volt three phase 460 volt three phase 575 volt three phase

Capacity Curves

MODEL: CB+114

Frequency: 60 Hz

RPM: 1750

Size: 1.5” x 1.5” x 4”

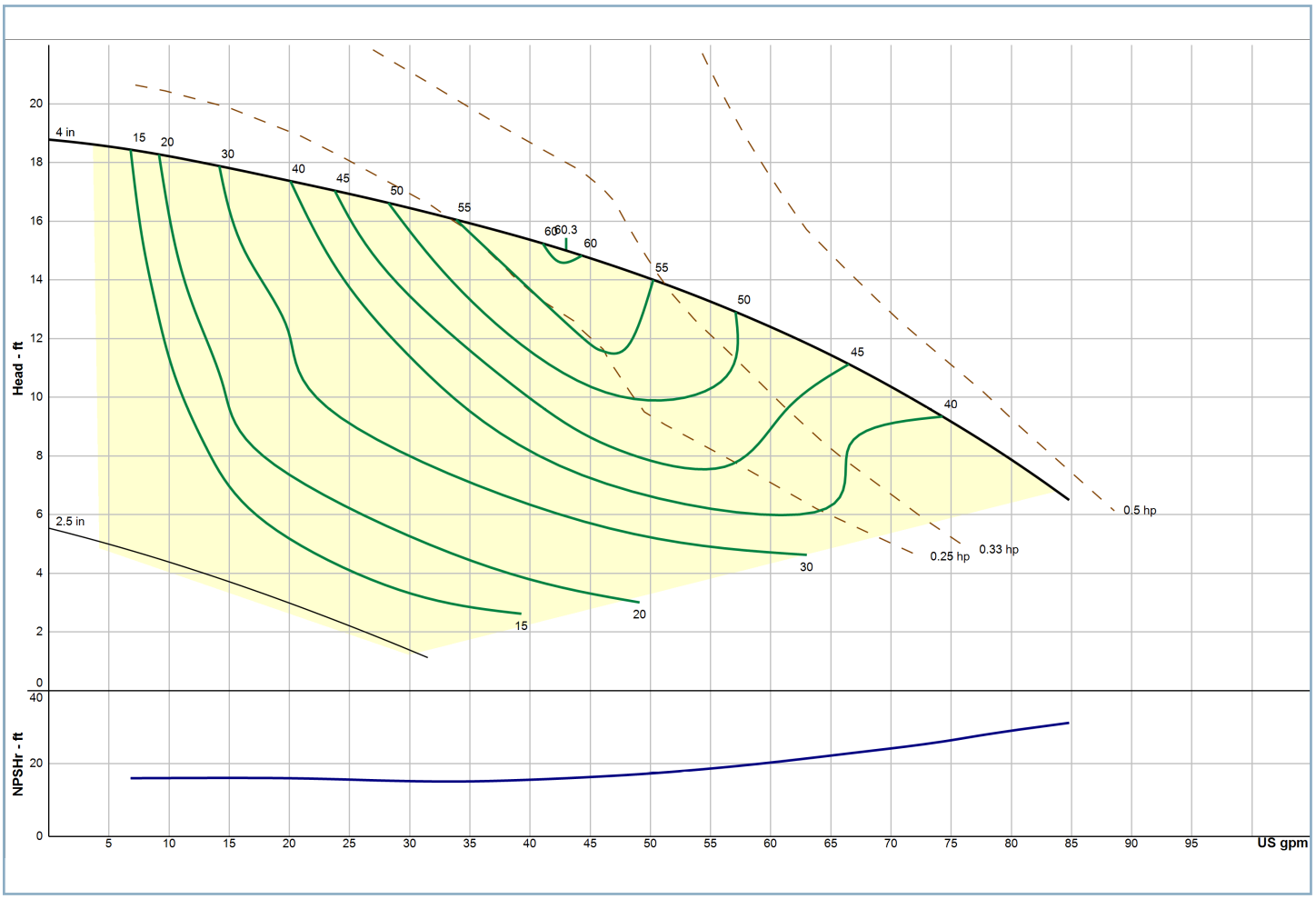

Capacity Curves

MODEL: CB+114

Frequency: 60 Hz

RPM: 3500

Size: 1.5” x 1.5” x 4”

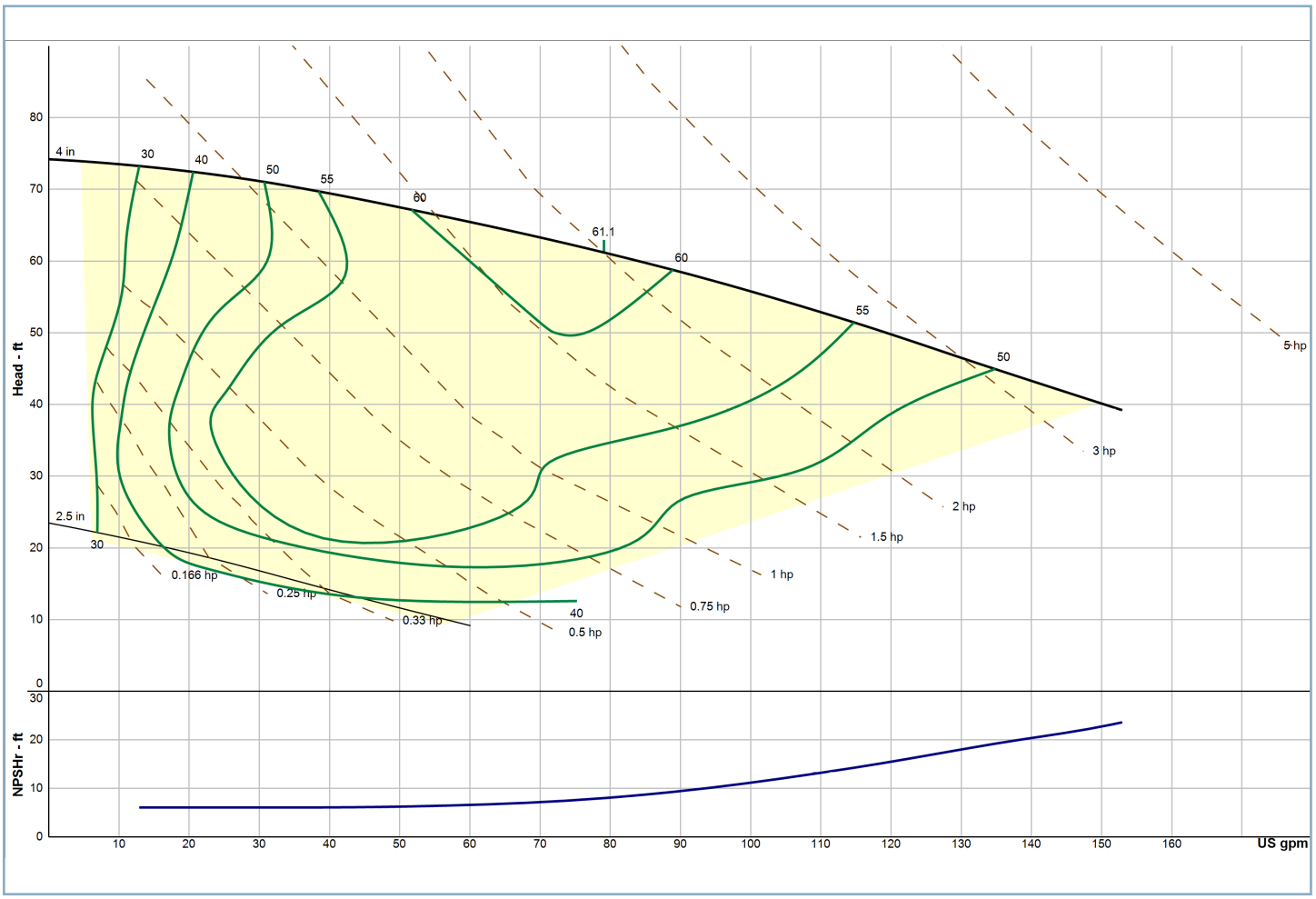

Viscosity and Specific Gravity Table

Product	Specific Gravity	Viscosity
Acetic Acid		
5%	1.01	
10%	1.01	31.7 SSU @ 59°F
50%	1.06	33.0 SSU @ 59°F
80%	1.08	35.0 SSU @ 59°F
Animal Fat	0.9	130 SSU @ 115°F
		50 SSU @ 200°F
Barbecue Sauce	1.05	11,500 SSU @ 40-75°F
Beer	1.02	32 SSU @ 68°F
Blood - Animal	0.93-0.98	15,000 SSU @ 55°F
Butter	0.93-0.98	15,000 SSU @ 55°F
		440 SSU @ 90°F
		220 SSU @ 115°F
Coconut Oil	0.92	125 SSU @ 106°F
Corn Oil	0.92	135 SSU @ 130°F
		54 SSU @ 212°F
Corn Starch Solutions		
22 Baume	1.18	150 SSU @ 70°F
		130 SSU @ 100°F
24 Baume	1.2	600 SSU @ 70°F
		440 SSU @ 100°F
25 Baume	1.21	1400 SSU @ 70°F
		800 SSU @ 100°F
Cottage Cheese	1.02	4,300 SSU
Cream (sweet)	1	73 SSU
	0.99	140 SSU
	0.99	215 SSU
Egg Yolk	1.12	21,500 @ 35°F
Gelatin	1.01	1,380-2,580 SSU @ 160°F
Glucose	1.35 - 1.44	35M-100M SSU @ 100°F
		4M-11M @ 150°F
Honey	1.3	1250-1425 SSU @ 100°F
Ice Cream Mix	1.15	1050 SSU @ 46°F
Lard	0.96	287 SSU @ 100°F
Linseed Oil	0.92 - 0.94	143 SSU @ 100°F
		93 SSU @ 130°F
Malt Syrup	1.41	85,400 SSU @ 77°F
Maple Syrup	1.37	2,000 SSU @ 68°F
Margarine	0.93	13,900 SSU @ 84°F
Milk	1.02 - 1.05	31.5 SSU @ 68°F
Molasses		
A. First	1.4 - 1.46	1,300 - 23,500 SSU @ 100°F
		700 - 8,160 SSU @ 130°F
B. Second	1.43 - 1.48	6,536 - 61,180 SSU @ 100°F
		3058 - 15,294 SSU @ 130°F
C. Blackstrap	1.46 - 1.49	12,190 - 23,500 SSU @ 100°F
Mustard	1	17,000 SSU @ 85°F
Olive Oil	0.91 - 0.92	200 SSU @ 100°F
Peanut Butter	1.2	77,400 SSU @ 110-140°F
Sesame Seed Oil	0.92	184 SSU @ 100°F
		110 SSU @ 130°F
Soy Bean Oil	0.91	500 SSU @ 44°F
Tomato Paste	1.14	60M-80M SSU
		21M SSU Approx.
Water	1	31 SSU @ 68°F

Parts List

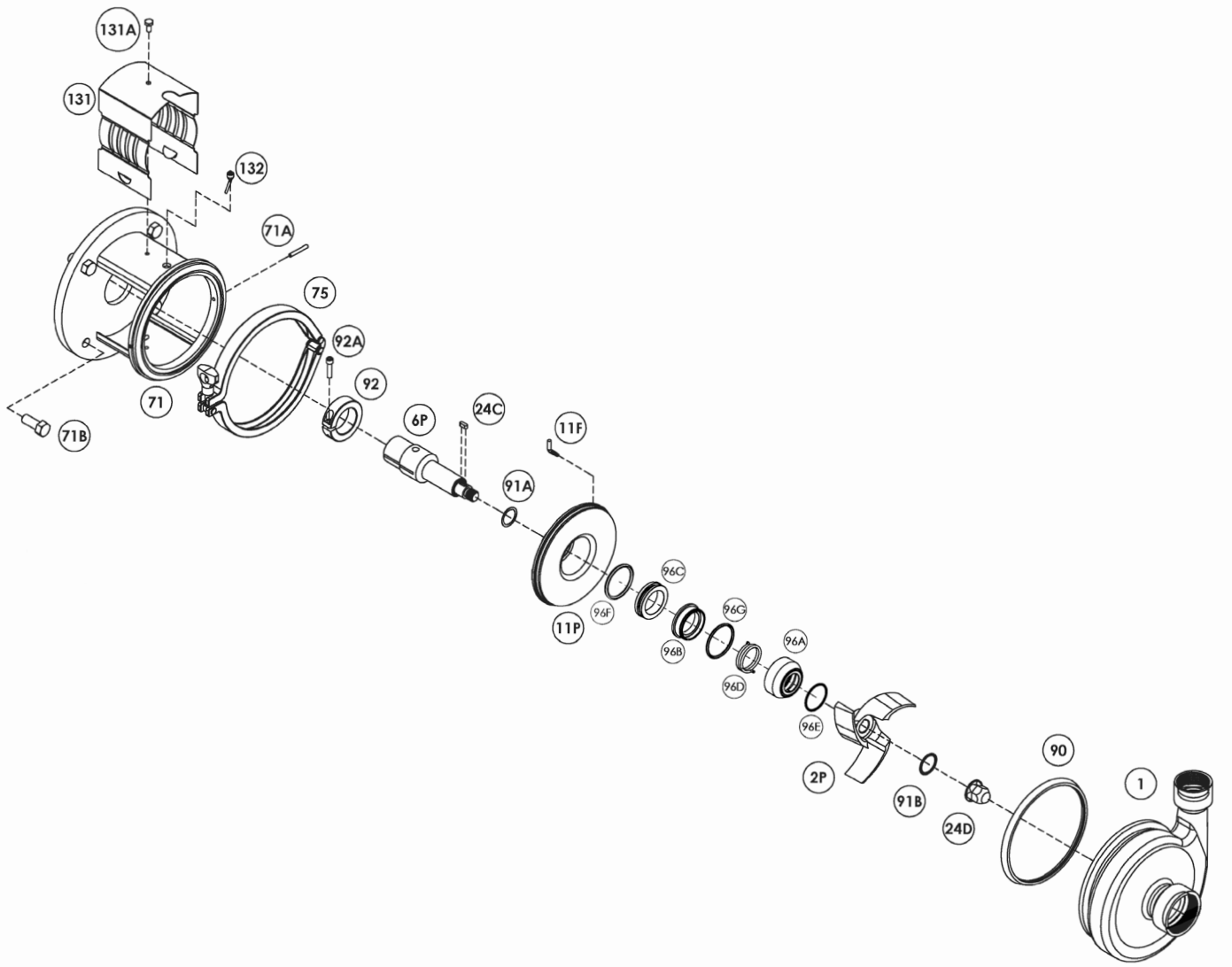

Part #	Part Name
1.	Casing
90.	Casing Gasket
24D.	Impeller Nut
91B.	Front Gasket
2P.	Impeller
96E.	Rotary Holder O-Ring
96A.	Rotary Holder
96D.	Internal Rotary Spring
96G.	Internal Rotary Face O-Ring
96B.	Internal Rotary Face
96C.	Static Face

Part #	Part Name
96F	Stactic Face Back O-RIng
11P.	Backplate
11F.	Backplate Pin
24C.	Shaft Key
6P.	Stub Shaft
92.	Drive Collar
92A.	Drive Collar Bolt
75.	Clamp
71.	Adapter
71A.	Adapter Pin
71B.	Adapter Mounting Screws

Part #	Part Name
132.	Water Cascade Assembly
131.	Seal Guard Assembly
131A.	Set Screw