CPE SYSTEMS INC

# CB+114MD

## TECHNICAL SPECIFICATIONS

SALES@CPESYSTEMS.COM | WWW.CPESYSTEMS.COM | +1 (800) 668-2268

# CB+114

The CB+ is a re-designed C-series centrifugal pump with an internal mechanical seal. It maintains the reliability and durability of the C-series pump, while adding the advantages of an internal seal. This seal allows for the product to lubricate the seal fully during use and for the CIP process to completely sanitize the seal. This pump is designed for small to medium sized applications.

## DESIGN

The internal seal allows for easy cleaning, prevents pooling on the seal, and permits greater seal pressure with less leaking. CPE CB+ pumps have the unique High-Clean cartridge seal; the seal is encased making it more sanitary and less prone to breakage. The CB+114 features the same collar and threaded impeller nut as the C+ pump. The collar clamps down evenly on all sides of the drive shaft, preventing the minor wobble that can occur from set screwed shafts. The threaded impeller nut fully secures the impeller in place, replacing the impeller pin of the c-series. Two specialized gaskets are used to seal the shaft and to allow a CIP procedure to clean behind the impeller. Together, the collar and bolted impeller reduce rattling at lower speeds. These design features make the CB+ uniquely capable for CIP and product transfer applications.

## FEATURES

- 1 ½" X 1 ½" Tri-Clamp connections
- 316L stainless steel construction
- 304 stainless steel adapter
- Internal mechanical seal

High-Clean Seal

## HORSEPOWER

| Horsepower | Max. Flow Rate | Shut Off Head |
|---|---|---|
| 1 HP | 75 GPM | 65 ft |
| 1.5 HP | 100 GPM | 75 ft |
| 2 HP | 125 GPM | 75 ft |
| 3 HP | 150 GPM | 75 ft |

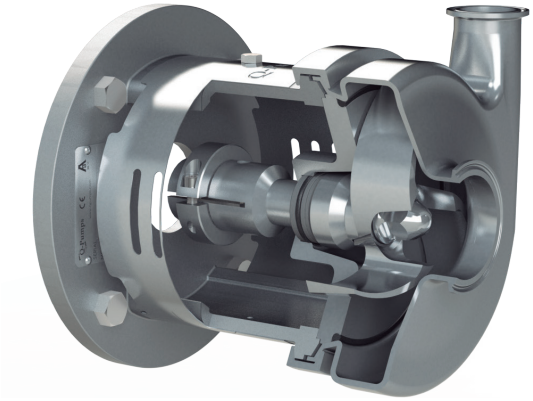

## TECHNICAL SPECIFICATIONS

| | |
|---|---|
| **Materials** | |
| Parts in Contact With Product: | 316L Stainless Steel |
| Other Steel Parts: | 304 Stainless Steel |
| Gaskets in Contact With Product: | EPDM (standard)<br>Buna or Viton (special order) |
| Weight Without Motor: | 12 lbs |
| **Mechanical Seal** | |
| Rotary Seal: | Carbon (standard)<br>Silicon Carbide (special order) |
| Stationary Seal: | Stainless Steel (standard)<br>Ceramic/Silicon Carbide (special order) |
| External Surface Finish: | Bright Polish |
| Internal Surface Finish: | 32 RA |
| Connection Type: | Tri-Clamp |
| Connection Size: | 1.5" x 1.5" |
| Max. Impeller Diameter: | 4" |
| **Motor** | |
| Type: | S.S Premium Efficiency<br>TEFC Motor |
| Motor Frame Size: | NEMA 56C C-Face |
| Speeds: | 1750 & 3450 RPM |
| **Operating Limits** | |
| Nominal Pressure: | 8 bar (117 PSI) |
| Temperature Range: | 14°F (-10°C) - 248°F (120°C) |
| Maximum Flow: | 150 GPM (34 $m^3$/h) |
| Maximum Differential Head: | 75 ft (23 m) |
| Maximum Speed: | 3500 RPM (60 Hz) |
| Viscosity: | 600 cP |
| **Approvals** | |
| Certification: | 3A- Authorization #1537, 02-11 (centrifugal pumps) for CIP |

# LENZE Variable Frequency Drive

The Lenze i550 protec is our new inverter series in the ½ HP to 20 HP range. The series is available in 115, 230, 460, and 575 volt, 60 Hz, with 1 phase and 3 phase input. Voltage and phase options for each portable assembly depend on the model and motor horsepower. The slim and sleek casing is also extremely durable, featuring both impact resistance and IP66 washdown protection. A micro USB interface is provided for more efficient programming. This user-friendly VFD is programmable and has scalable functionality. This trustworthy and powerful VFD can be implemented into your operations with ease. The i550 can be controlled by the keypad, the included potentiometer, or a remote control (the remote control is available at additional cost). Our portable mixer and blender assemblies feature this VFD, allowing the speed to be adjusted to suit the product and process.

## TECHNICAL SPECIFICATIONS

| | |
|---|---|
| Horsepower: | 1 to 3 HP |
| 1Ø/3Ø Input: | 1Ø 115/230 VAC, 50/60 Hz<br>3Ø 230/460/575 VAC, 50/60 Hz |
| 3Ø Output: | 208-230/460/575 VAC |
| Ambient Temperature: | -22°F - 131°F (-30°C - 55°C) |
| Standard IO: | 5x digital input, 1x digital output, 2x analog input, 1x analog output, 1x relay output |
| Communication Networks: | CANopen, Modbus RTU, Modbus TCP, IO-Link, EtherCAT, EtherNet/IP, PROFINET |
| Approvals: | CE, UL, CSA, EAC, RoHS |

## FEATURES

- IP66 (NEMA 4X) approved; it is both dust and water resistant.
- Equipped with a Micro USB interface for programming and diagnostics.
- Full onboard PID programming for interfacing with flow meters, level controls, pressure sensors, and can/bottle fillers.
- The i550 Protec has a sensorless vector control for synchronous motors.
- Equipped with multiple digital and analog inputs for remote control and safety interlocks.
- Compatible with our wireless remote controls, pressure switches, and run dry protection.
- Equipped with a potentiometer (optional).

# Knockdown Pump Cart

Custom designed for the craft food and beverage industry, this is our smallest pump cart, built for pumps up to 2 HP. This cart is arodynamic, tilt draining, maneuverable, and has a small footprint. The knockdown cart handle is removable, creating a compact cart that can be easily stored or wheeled into tight spaces. All parts are hand welded in Canada for quality assurance and durability.

| | |
|---|---|
| Frame: | 16 ga stainless steel square tube with foot |
| Handle: | 16 ga stainless steel square tube |
| Platform: | 14 ga stainless steel AISI 304<br>Pre-drilled to fit 56 and 143 NEMA frames |
| Axle: | 1/2 ga stainless steel rod axle |
| Wheels: | 2” x 5” non marking neoprene wheels |

# Medium Duty Cart

Custom designed for the craft food and beverage industry, this is our smallest pump cart, built for pumps 3 to 5 HP. This cart is aerodynamic, tilt draining, maneuverable, and has a small footprint. All parts are hand welded in Canada for quality assurance and durability.

| | |
|---|---|
| Frame: | 16 ga stainless steel round tube with foot |
| Handle: | 16 ga stainless steel round tube |
| Platform: | 11 ga stainless steel AISI 304<br>Pre-drilled to fit 184 and 213 NEMA frames |
| Axle: | 1/2 “ stainless steel rod axle |
| Wheels: | 8” Duraflex rubber wheels |

# Assemblies

The CB+114 is available as a pump and motor or as a portable pump assembly. The portable pump assembly includes a VFD, cart, cord, and plug. The portable assembly comes fully programmed and has more voltage options than the pump and motor.

## PORTABLE ASSEMBLY COMPONENTS:

- CB+114 Pump Head
- TEFC or SS Washdown Motor
- LENZE VFD
- Stainless Steel Pump Cart
- Electrical Cord and Plug of Choice

## PUMP AND MOTOR COMPONENTS:

- CB+114 Pump Head
- TEFC or SS Washdown Motor

# Motors

## STAINLESS STEEL WASHDOWN MOTOR:

- Totally Enclosed Fan Cooled (TEFC)
- Construction Material: Stainless Steel
- NEMA C-Face / 56C Frame
- NEMA Design B
- Factory Certified Class I, Division 2, Groups A, B, C, and D

## TEFC MOTOR:

- Totally Enclosed Fan Cooled (TEFC)
- Construction Material: Painted Aluminum
- IP55 Enclosure Protection
- Class I, Division II, Groups A, B, C, and D Compliant

# Portable Assembly Options

| Horsepower | Available Motors | Cart | Available Voltages |
|---|---|---|---|
| 1 HP | Stainless Steel Washdown Motor<br>TEFC Motor | Knockdown Pump Cart | 115 volt single phase<br>230 volt single phase<br>230 volt three phase<br>460 volt three phase<br>575 volt three phase |
| 1 ½ HP | Stainless Steel Washdown Motor<br>TEFC Motor | Knockdown Pump Cart | 115 volt single phase<br>230 volt single phase<br>230 volt three phase<br>460 volt three phase<br>575 volt three phase |
| 2 HP | Stainless Steel Washdown Motor<br>TEFC Motor | Knockdown Pump Cart | 115 volt single phase<br>230 volt single phase<br>230 volt three phase<br>460 volt three phase<br>575 volt three phase |
| 3 HP | Stainless Steel Washdown Motor<br>TEFC Motor | Medium Duty Cart | 230 volt single phase<br>230 volt three phase<br>460 volt three phase<br>575 volt three phase |

# Capacity Curves

MODEL: CB+114

Frequency: 60 Hz

RPM: 1750

Size: 1.5” x 1.5” x 4”

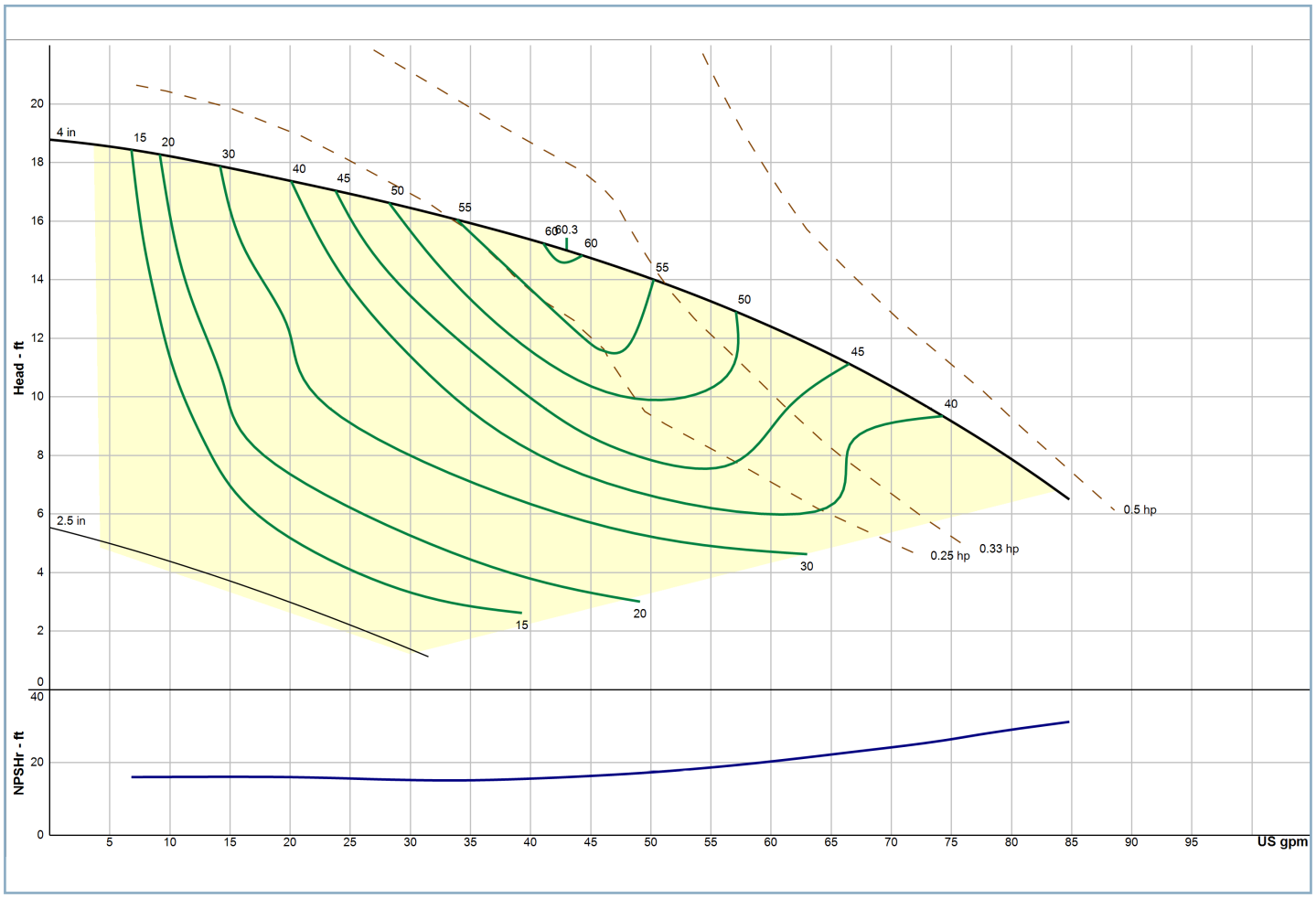

# Capacity Curves

MODEL: CB+114

Frequency: 60 Hz

RPM: 3500

Size: 1.5” x 1.5” x 4”

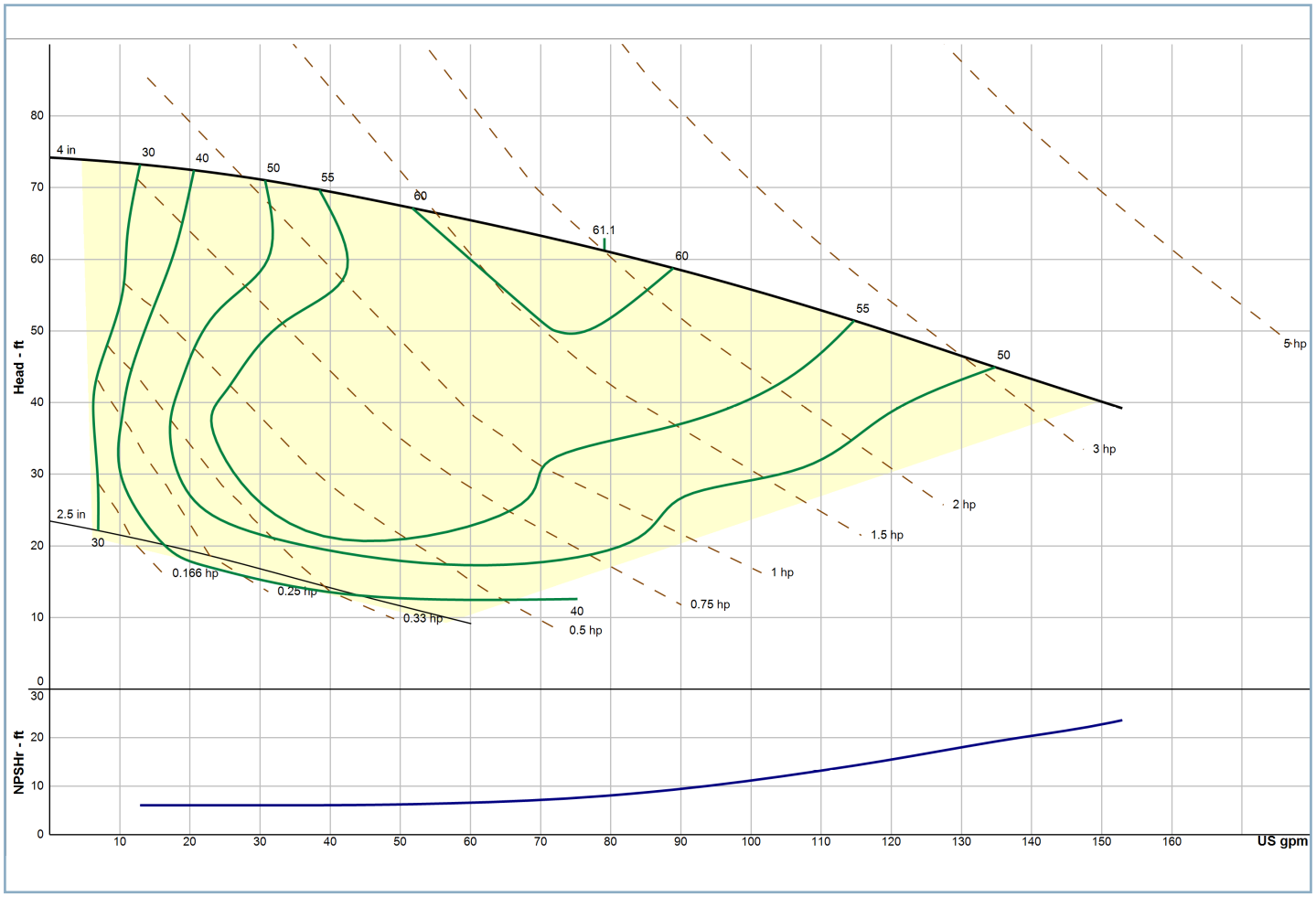

# Viscosity and Specific Gravity Table

| Product | Specific Gravity | Viscosity |
|---|---|---|
| Acetic Acid | | |
| 5% | 1.01 | |
| 10% | 1.01 | 31.7 SSU @ 59°F |
| 50% | 1.06 | 33.0 SSU @ 59°F |
| 80% | 1.08 | 35.0 SSU @ 59°F |
| Animal Fat | 0.9 | 130 SSU @ 115°F |
| | | 50 SSU @ 200°F |
| Barbecue Sauce | 1.05 | 11,500 SSU @ 40-75°F |
| Beer | 1.02 | 32 SSU @ 68°F |
| Blood - Animal | 0.93-0.98 | 15,000 SSU @ 55°F |
| Butter | 0.93-0.98 | 15,000 SSU @ 55°F |
| | | 440 SSU @ 90°F |
| | | 220 SSU @ 115°F |
| Coconut Oil | 0.92 | 125 SSU @ 106°F |
| Corn Oil | 0.92 | 135 SSU @ 130°F |
| | | 54 SSU @ 212°F |
| Corn Starch Solutions | | |
| 22 Baume | 1.18 | 150 SSU @ 70°F |
| | | 130 SSU @ 100°F |
| 24 Baume | 1.2 | 600 SSU @ 70°F |
| | | 440 SSU @ 100°F |
| 25 Baume | 1.21 | 1400 SSU @ 70°F |
| | | 800 SSU @ 100°F |
| Cottage Cheese | 1.02 | 4,300 SSU |
| Cream (sweet) | 1 | 73 SSU |
| | 0.99 | 140 SSU |
| | 0.99 | 215 SSU |
| Egg Yolk | 1.12 | 21,500 @ 35°F |
| Gelatin | 1.01 | 1,380-2,580 SSU @ 160°F |
| Glucose | 1.35 - 1.44 | 35M-100M SSU @ 100°F |
| | | 4M-11M @ 150°F |
| Honey | 1.3 | 1250-1425 SSU @ 100°F |
| Ice Cream Mix | 1.15 | 1050 SSU @ 46°F |
| Lard | 0.96 | 287 SSU @ 100°F |
| Linseed Oil | 0.92 - 0.94 | 143 SSU @ 100°F |
| | | 93 SSU @ 130°F |
| Malt Syrup | 1.41 | 85,400 SSU @ 77°F |
| Maple Syrup | 1.37 | 2,000 SSU @ 68°F |
| Margarine | 0.93 | 13,900 SSU @ 84°F |
| Milk | 1.02 - 1.05 | 31.5 SSU @ 68°F |
| Molasses | | |
| A. First | 1.4 - 1.46 | 1,300 - 23,500 SSU @ 100°F |
| | | 700 - 8,160 SSU @ 130°F |
| B. Second | 1.43 - 1.48 | 6,536 - 61,180 SSU @ 100°F |
| | | 3058 - 15,294 SSU @ 130°F |
| C. Blackstrap | 1.46 - 1.49 | 12,190 - 23,500 SSU @ 100°F |
| Mustard | 1 | 17,000 SSU @ 85°F |
| Olive Oil | 0.91 - 0.92 | 200 SSU @ 100°F |
| Peanut Butter | 1.2 | 77,400 SSU @ 110-140°F |
| Sesame Seed Oil | 0.92 | 184 SSU @ 100°F |
| | | 110 SSU @ 130°F |
| Soy Bean Oil | 0.91 | 500 SSU @ 44°F |
| Tomato Paste | 1.14 | 60M-80M SSU |
| | | 21M SSU Approx. |
| Water | 1 | 31 SSU @ 68°F |

**Parts List**

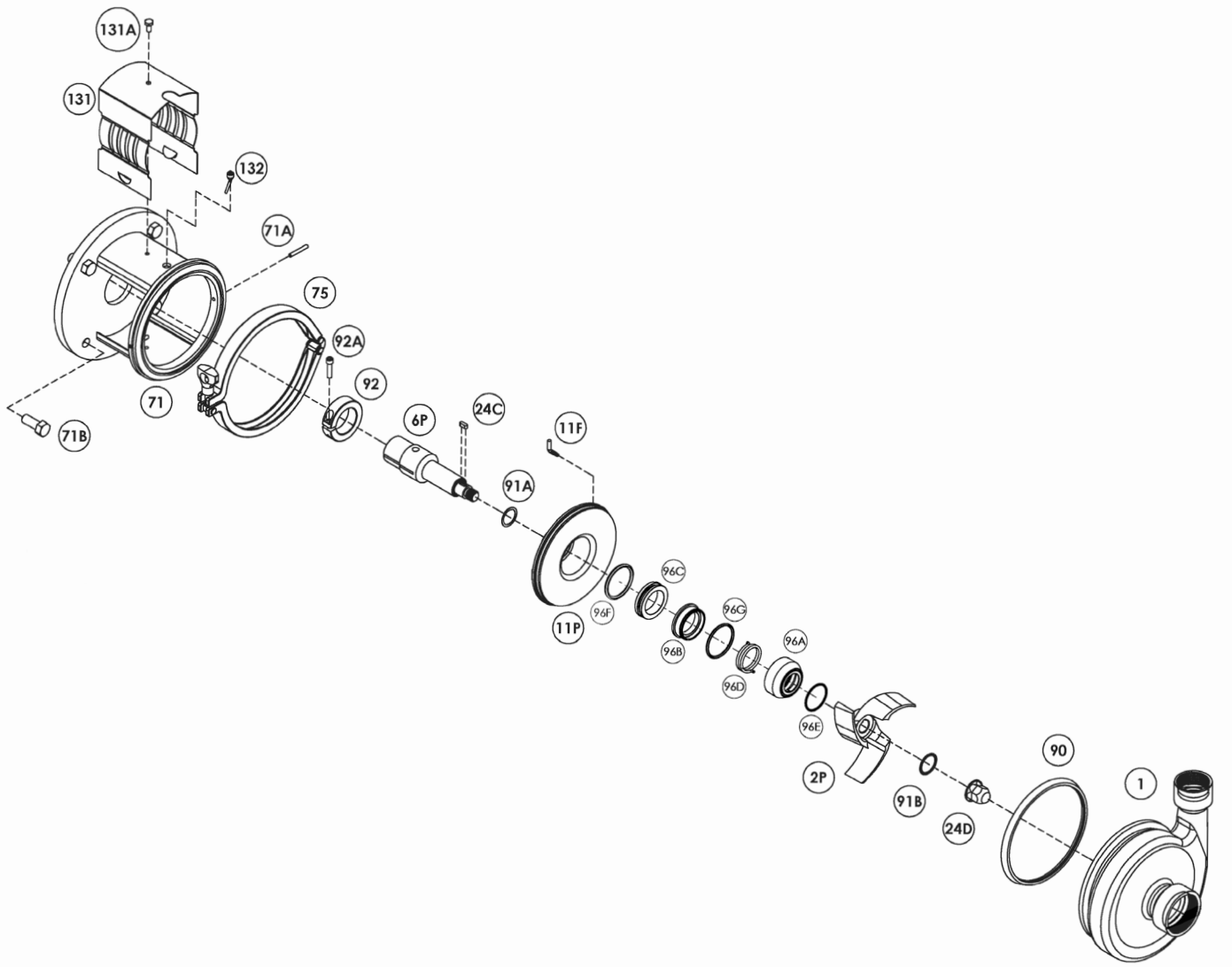


| Part # | Part Name |
|---|---|
| 1. | Casing |
| 90. | Casing Gasket |
| 24D. | Impeller Nut |
| 91B. | Front Gasket |
| 2P. | Impeller |
| 96E. | Rotary Holder O-Ring |
| 96A. | Rotary Holder |
| 96D. | Internal Rotary Spring |
| 96G. | Internal Rotary Face O-Ring |
| 96B. | Internal Rotary Face |
| 96C. | Static Face |

| Part # | Part Name |
|---|---|
| 96F | Stactic Face Back O-RIng |
| 11P. | Backplate |
| 11F. | Backplate Pin |
| 24C. | Shaft Key |
| 6P. | Stub Shaft |
| 92. | Drive Collar |
| 92A. | Drive Collar Bolt |
| 75. | Clamp |
| 71. | Adapter |
| 71A. | Adapter Pin |
| 71B. | Adapter Mounting Screws |

| Part # | Part Name |
|---|---|
| 132. | Water Cascade Assembly |
| 131. | Seal Guard Assembly |
| 131A. | Set Screw |